INSTALLATION USER GUIDE
THE EXTREME RANGE COVER

4 PLATE TYPES :

- **CARBON ROLLED STEEL**
- **GROUND STEEL**
- **ENAMELLED CAST IRON**
- **HARD CHROME**

1

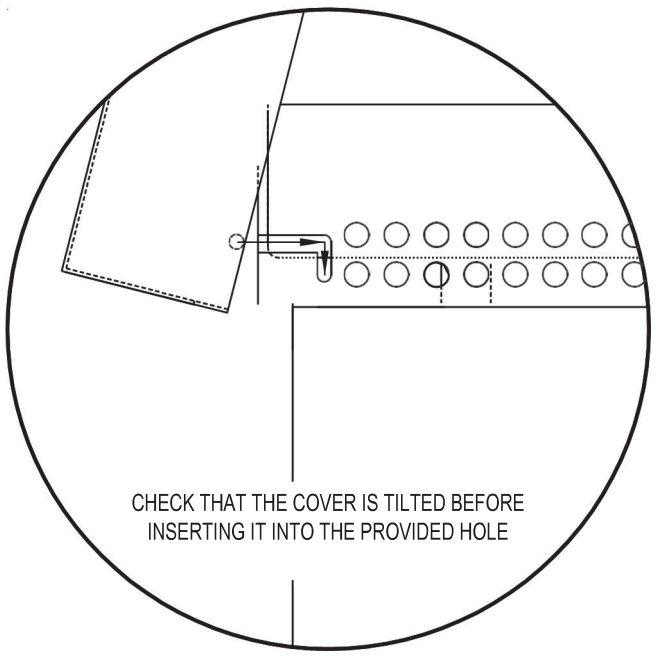

2

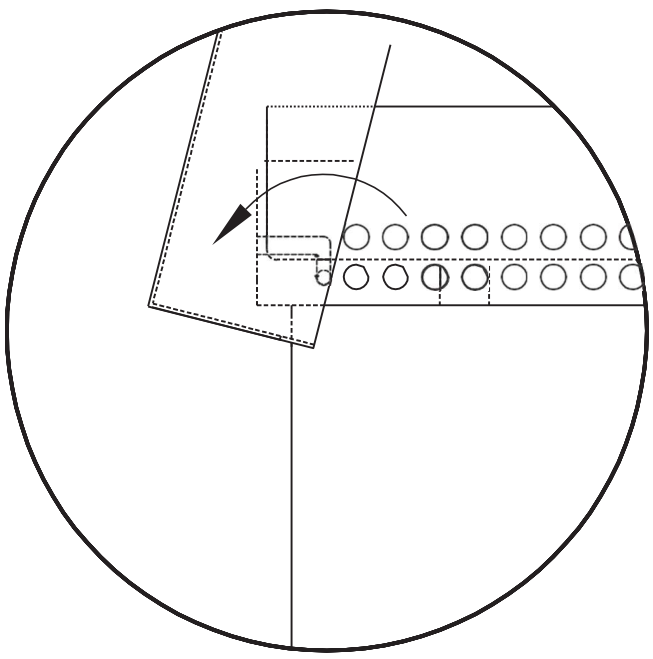
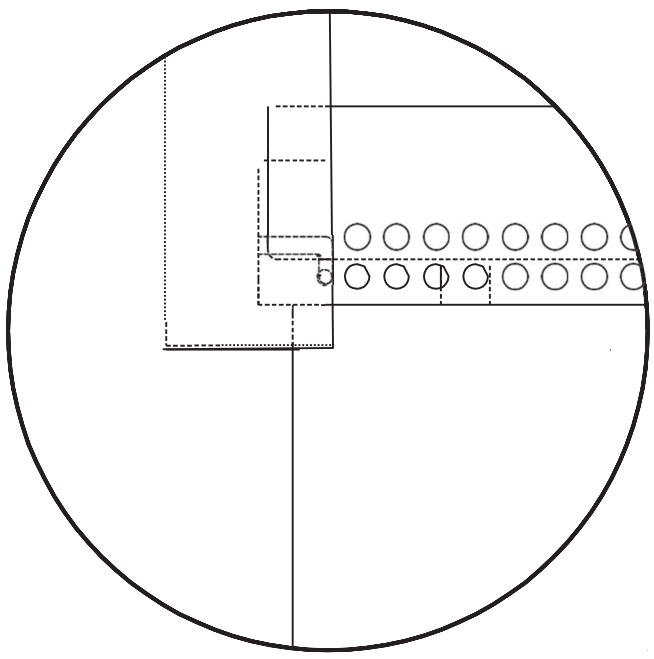
3